Instructions – Parts List

Parts

Pro–Shot™ Grease Dispense Valve

309032 rev.J

For high pressure grease dispense.

8000 psi (55 MPa, 552 bar) Maximum Working Pressure

Model No. 242055, Series B, 1/4 npt Fluid Inlet
Model No. 242056, Series B, 1/4 npt Fluid Inlet with Coupler
Model No. 242057, Series B, 3/8 npt Fluid Inlet
Model No. 242058, Series B, 3/8 npt Fluid Inlet with Coupler

Important Safety Instructions
Read all warnings and instructions in this manual.
Save these instructions.

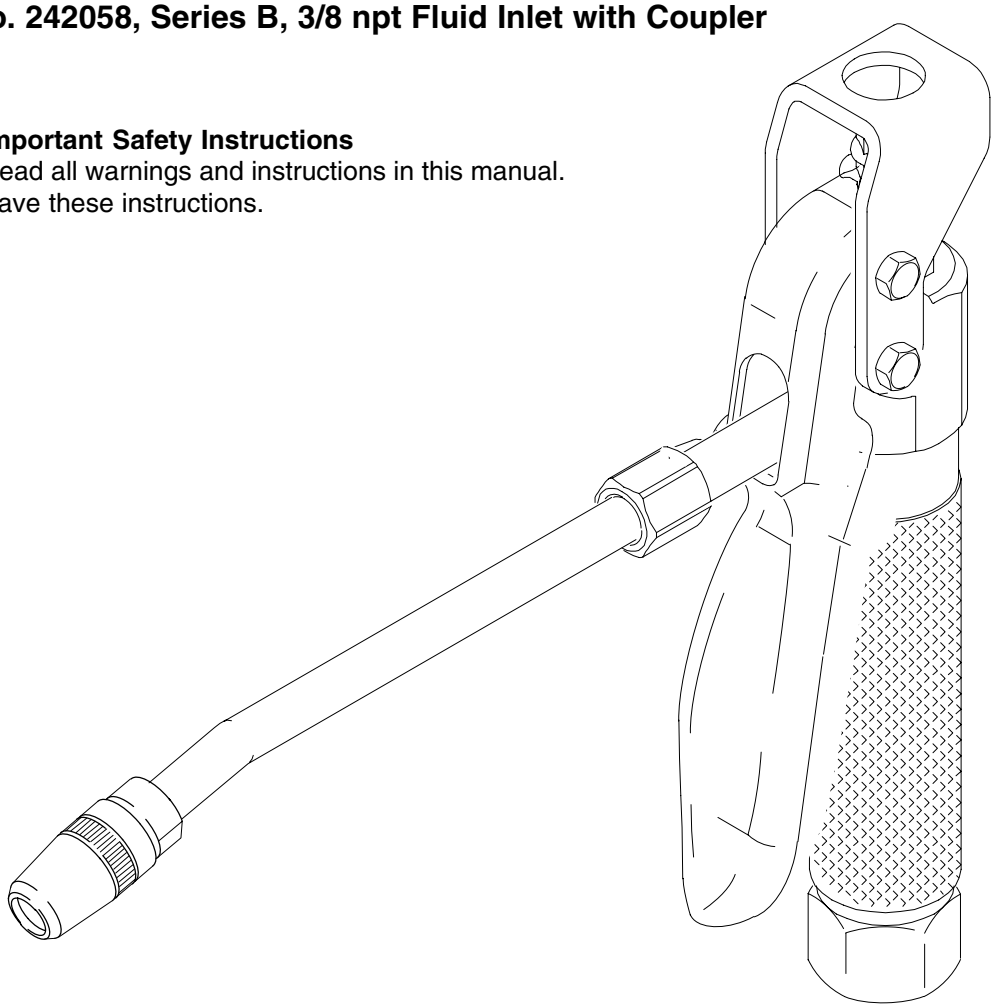

GRACO INC. P.O. BOX 1441 MINNEAPOLIS, MN 55440–1441

PROVEN QUALITY. LEADING TECHNOLOGY.

Copyright 1999, Graco Inc. is registered to I.S. EN ISO 9001

Table of Contents

Warnings 2
Operation 4
Adjustment 4
Service 5
Troubleshooting Guide 5
Parts List 6
Technical Data 7
Graco Standard Warranty 8
Graco Information 8

Symbols

Warning Symbol

⚠ WARNING

This symbol alerts you to the possibility of serious injury or death if you do not follow the instructions.

Caution Symbol

⚠ CAUTION

This symbol alerts you to the possibility of damage to or destruction of equipment if you do not follow the instructions.

⚠ WARNING

INSTRUCTIONS

EQUIPMENT MISUSE HAZARD

Equipment misuse can cause the equipment to rupture or malfunction and result in serious injury.

- This equipment is for professional use only.
- Read all instruction manuals, tags, and labels before operating the equipment.
- Use the equipment only for its intended purpose. If you are not sure, call your Graco distributor.
- Do not alter or modify this equipment.
- Do not exceed the maximum working pressure of the lowest rated system component. This equipment has a 8000 psi (55 MPa, 552 bar) maximum working pressure.
- Check equipment daily. Repair or replace worn or damaged parts immediately.
- Handle hoses carefully. Do not pull on hoses to move equipment.
- Route hoses away from traffic areas, sharp edges, moving parts, and hot surfaces. Do not expose Graco hoses to temperatures above 66°C (150°F) or below –40°C (–40°F).
- Comply with all applicable local, state, and national fire, electrical, and safety regulations.
- Do not use a low pressure flexible extension on a high pressure dispensing valve.
- Do not attempt to force lubricant into a fitting.

⚠ WARNING

SKIN INJECTION HAZARD

Spray from the valve, leaks or ruptured components can inject fluid into your body and cause extremely serious injury, including the need for amputation. Fluid splashed in the eyes or on the skin can also cause serious injury.

- Fluid injected into the skin might look like just a cut, but it is a serious injury. **Get immediate surgical treatment.**
- Do not point the valve at anyone or at any part of the body.
- Do not put your hand or fingers over the grease fitting coupler.
- Do not stop or deflect leaks with your hand, body, glove or rag.
- Tighten all fluid connections before operating the equipment.
- Check the hoses, tubes, and couplings daily. Replace worn or damaged parts immediately. Do not repair high pressure couplings; you must replace the entire hose.
- Use only Graco approved hoses.

TOXIC FLUID HAZARD

Hazardous fluid or toxic fumes can cause serious injury or death if splashed in the eyes or on the skin, inhaled, or swallowed.

- Know the specific hazards of the fluid you are using.
- Store hazardous fluid in an approved container. Dispose of hazardous fluid according to all local, state and national guidelines.
- Always wear protective eyewear, gloves, clothing and respirator as recommended by the fluid and solvent manufacturer.

Pressure Relief Procedure

⚠ WARNING

INJECTION HAZARD
Fluid under high pressure can be injected through the skin and cause serious injury. To reduce the risk of an injury from injection, splashing fluid, or moving parts, follow the **Pressure Relief Procedure** whenever you:

- are instructed to relieve the pressure,
- stop dispensing,
- check or service any of the system equipment,
- or install or clean the nozzle.

To reduce the risk of serious bodily injury, including fluid injection, splashing in the eyes or on the skin, or injury from moving parts, always follow this procedure whenever you shut off the pump, and before inspecting, removing, cleaning or repairing any part of the pump or system.

1. Close the supply pump's bleed–type master air valve *(required in pneumatic systems)*.
2. Open the dispensing valve until pressure is fully relieved.
3. Open the fluid drain valve at the pump fluid outlet. Leave the drain valve open until you are ready to use the system again.

   NOTE: *If you suspect the dispensing valve, extension or grease fitting coupler is clogged, or that pressure has not been fully relieved after following all the previous steps,* using a rag VERY SLOWLY loosen the coupler or hose end coupling and allow pressure to be relieved gradually, then loosen the part completely. Now clear the clog.

Operation

This dispense valve provides positive control of high pressure lubricants. When supplied with air, the pump will start when the valve is triggered and will stall against pressure when the trigger is released.

Adjustment

⚠ WARNING

To reduce the risk of serious injury whenever you are instructed to relieve pressure, always follow the **Pressure Relief Procedure** on page 3.

1. Relieve the pressure.
2. To adjust the clearance, loosen the top nut (Fig. 1, item 5) and turn the bottom nut (5) in or out as needed. To increase grease flow turn bottom nut in. To reduce grease flow turn bottom nut out. Hold the bottom nut in place and securely tighten the top nut.

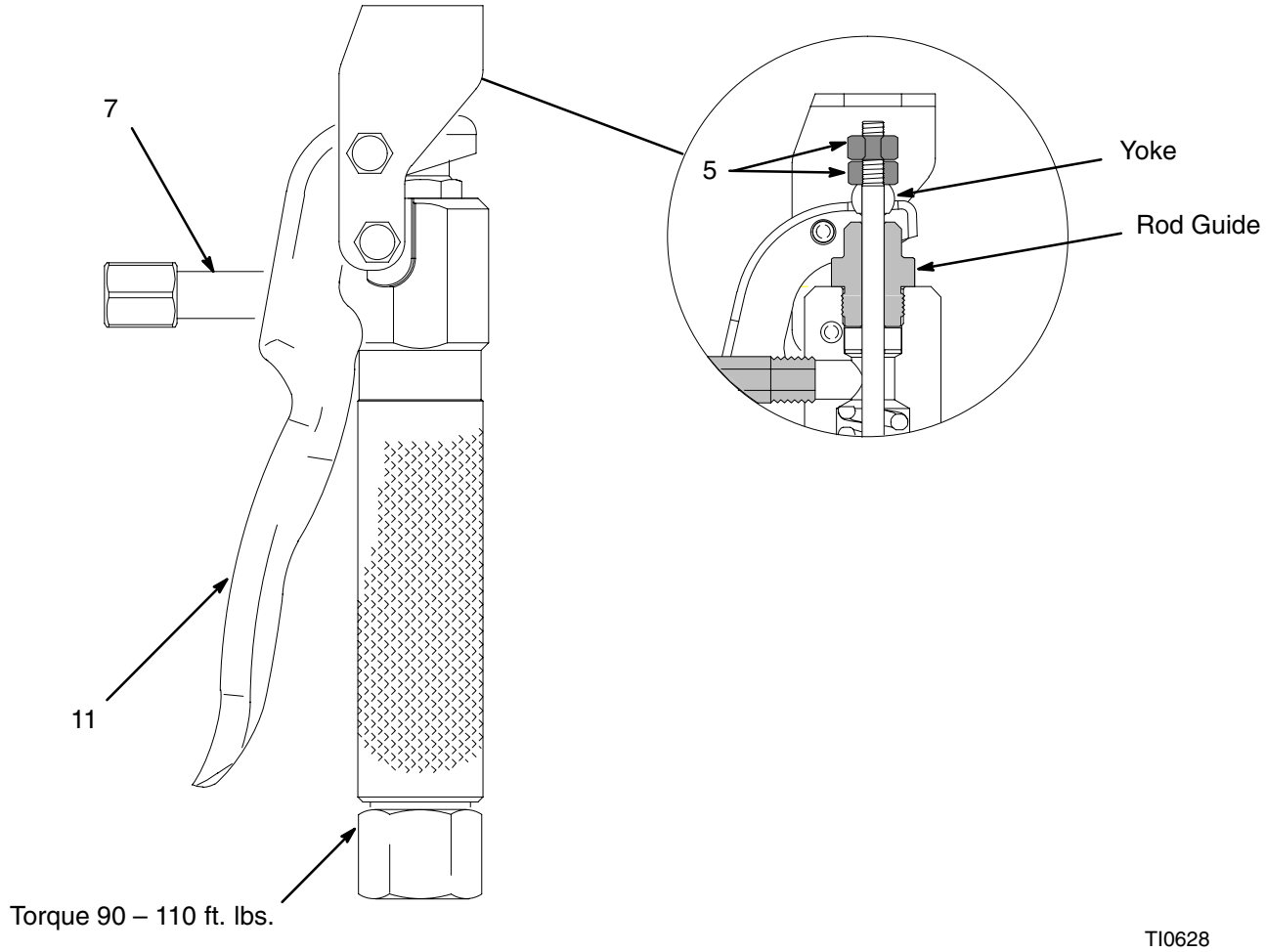

Fig. 1

Service

⚠ WARNING

To reduce the risk of serious injury whenever you are instructed to relieve pressure, always follow the **Pressure Relief Procedure** on page 3.

1. Relieve the pressure.
2. Check all parts thoroughly when disassembling, and carefully replace any that are worn or damaged.
3. Remove bottom seat adapter (10) from grease gun body (9). See parts listing on page 6.
4. Remove acorn nuts (1) and bolts (17) from trigger guard (12). Remove trigger guard (12).
5. Remove outlet adapter (7).
6. Remove hex nuts (5).
7. Remove yoke (16).
8. Remove rod guide (18) from grease gun body (9).
9. Push plunger rod (15) through seal (4). Be careful; seat (14), ball (2) and copper gasket (6) will fall out bottom.
10. Replace all parts included in service kit 243446.
11. Reassemble valve.

⚠ WARNING

To reduce the risk of serious injury after servicing valve, always make sure the valve is in the closed position with trigger released.

12. With trigger in free position tighten bottom nut (5) until yoke bottoms out on rod guide, See Fig.1, (this is the maximum flow setting). Back off nut approximately 1/8 turn. Hold bottom nut in place and securely tighten top nut.
13. If additional adjustment is desired, follow adjustment procedure on page 4.
14. For specific operational problems, see **TROUBLESHOOTING GUIDE** on page 5.

Troubleshooting Guide

Problem	Cause	Solution
Grease flows with trigger released	Damaged ball Damaged seat Out of adjustment Missing ball	Install service kit Install service kit Readjust (See Figure 1) Install service kit
No grease flow when trigger pulled	Out of adjustment Plugged seat Disassembled plunger and rod	Readjust (See Figure 1) Clean seat Reassemble
Grease leaking out of bottom of gun	Loose bottom adapter Missing copper Gaskets Worn copper Gaskets	Tighten adapter (See Figure 1) Install service kit Install service kit
Grease leaking out the top of gun	Worn seal in top of gun	Install service kit
Short seal life	Worn plunger rod	Install service kit
Trigger will not move	Bent guard Bent pivot pin Damaged handle	Replace guard Install service kit Replace trigger

Parts

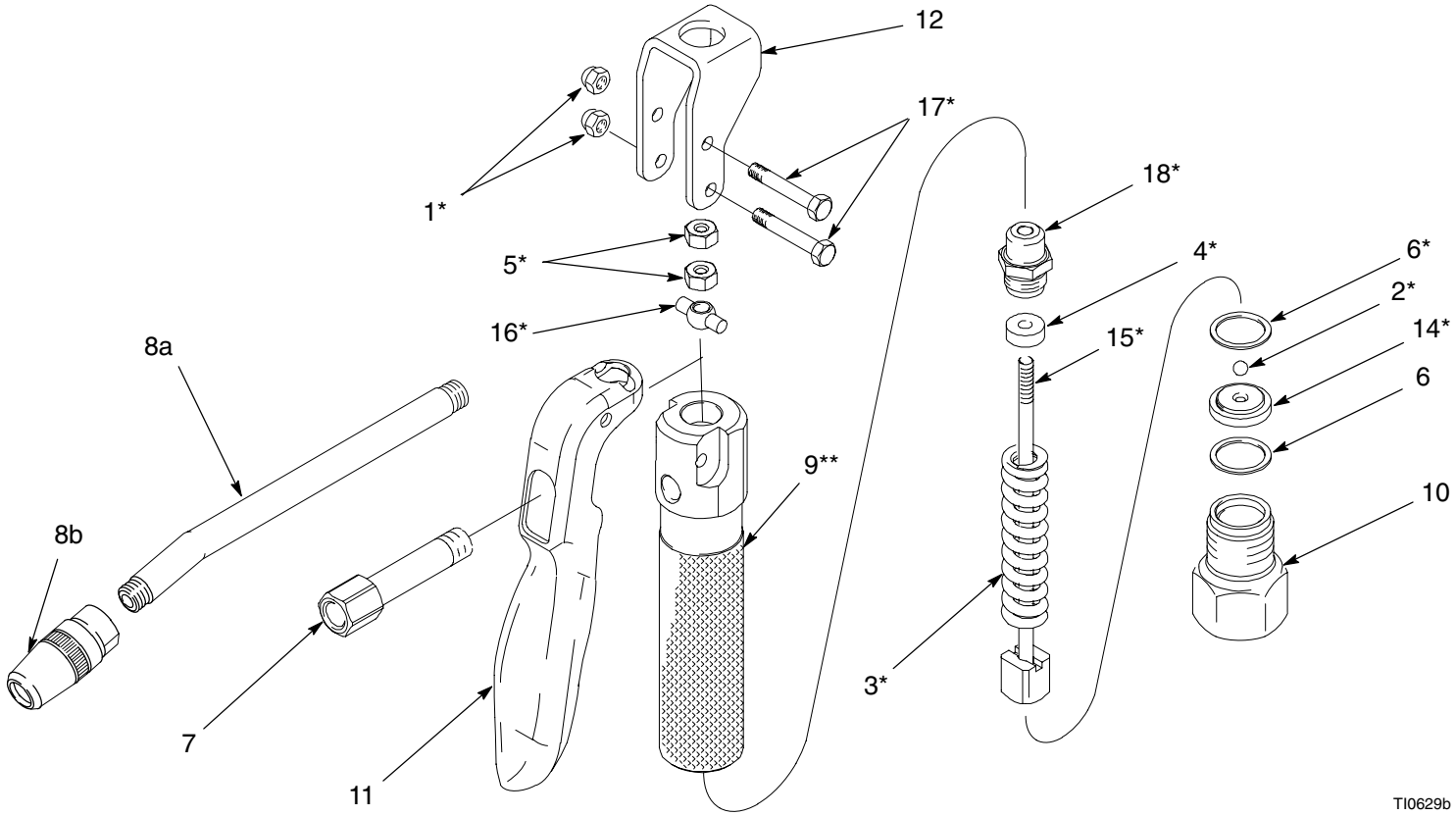

Ref No.	Part No.	Description	Qty.
1*		NUT, self–locking, 10–32	2
2*		BALL, carbide	1
3*		SPRING, compression	1
4*		SEAL	1
5*		NUT, hex, 10–32	2
6*		GASKET, copper	2
7	196783	ADAPTER, outlet; 1/8 npt	1
8	200389	NOZZLE	1
		Includes items 8a and 8b	
		Model 242056 and 242058 only	
8a		TUBE, adapter (not sold separately)	1
8b	200325	COUPLER	1
		Model 242056 and 242058 only	
9**		BODY, grease gun	1
10	195610	1/4” ADAPTER, seat	1
		Model 242055 and 242056 only	
	195620	3/8” ADAPTER, seat	1
		Model 242057 and 242058 only	
11	196999	TRIGGER	1
12	195612	GUARD, trigger	1
14*		SEAT, valve	1
15*		PLUNGER/ROD ASSY.	1
16*		YOKE	1
17*		SHAFT, pivot	2
18*		GUIDE, rod	1

* Items included in Service Kit 243446 only.

** Not available.

Technical Data

Category	Data
Maximum Working Pressure	8000 PSI
Inlet Size	1/4” or 3/8”
Wetted Parts	Chrome Vanadium, Polyurethane, Brass, Carbon Steel, Alloy Steel

Notes

Graco Standard Warranty

Graco warrants all equipment referenced in this document which is manufactured by Graco and bearing its name to be free from defects in material and workmanship on the date of sale to the original purchaser for use. With the exception of any special, extended, or limited warranty published by Graco, Graco will, for a period of twelve months from the date of sale, repair or replace any part of the equipment determined by Graco to be defective. This warranty applies only when the equipment is installed, operated and maintained in accordance with Graco's written recommendations.

This warranty does not cover, and Graco shall not be liable for general wear and tear, or any malfunction, damage or wear caused by faulty installation, misapplication, abrasion, corrosion, inadequate or improper maintenance, negligence, accident, tampering, or substitution of non–Graco component parts. Nor shall Graco be liable for malfunction, damage or wear caused by the incompatibility of Graco equipment with structures, accessories, equipment or materials not supplied by Graco, or the improper design, manufacture, installation, operation or maintenance of structures, accessories, equipment or materials not supplied by Graco.

This warranty is conditioned upon the prepaid return of the equipment claimed to be defective to an authorized Graco distributor for verification of the claimed defect. If the claimed defect is verified, Graco will repair or replace free of charge any defective parts. The equipment will be returned to the original purchaser transportation prepaid. If inspection of the equipment does not disclose any defect in material or workmanship, repairs will be made at a reasonable charge, which charges may include the costs of parts, labor, and transportation.

THIS WARRANTY IS EXCLUSIVE, AND IS IN LIEU OF ANY OTHER WARRANTIES, EXPRESS OR IMPLIED, INCLUDING BUT NOT LIMITED TO WARRANTY OF MERCHANTABILITY OR WARRANTY OF FITNESS FOR A PARTICULAR PURPOSE.

Graco's sole obligation and buyer's sole remedy for any breach of warranty shall be as set forth above. The buyer agrees that no other remedy (including, but not limited to, incidental or consequential damages for lost profits, lost sales, injury to person or property, or any other incidental or consequential loss) shall be available. Any action for breach of warranty must be brought within two (2) years of the date of sale.

GRACO MAKES NO WARRANTY, AND DISCLAIMS ALL IMPLIED WARRANTIES OF MERCHANTABILITY AND FITNESS FOR A PARTICULAR PURPOSE, IN CONNECTION WITH ACCESSORIES, EQUIPMENT, MATERIALS OR COMPONENTS SOLD BUT NOT MANUFACTURED BY GRACO. These items sold, but not manufactured by Graco (such as electric motors, switches, hose, etc.), are subject to the warranty, if any, of their manufacturer. Graco will provide purchaser with reasonable assistance in making any claim for breach of these warranties.

In no event will Graco be liable for indirect, incidental, special or consequential damages resulting from Graco supplying equipment hereunder, or the furnishing, performance, or use of any products or other goods sold hereto, whether due to a breach of contract, breach of warranty, the negligence of Graco, or otherwise.

FOR GRACO CANADA CUSTOMERS
The parties acknowledge that they have required that the present document, as well as all documents, notices and legal proceedings entered into, given or instituted pursuant hereto or relating directly or indirectly hereto, be drawn up in English. Les parties reconnaissent avoir convenu que la rédaction du présente document sera en Anglais, ainsi que tous documents, avis et procédures judiciaires exécutés, donnés ou intentés à la suite de ou en rapport, directement ou indirectement, avec les procedures concernées.

Graco Information

TO PLACE AN ORDER, contact your Graco distributor, or call one of the following numbers to identify the distributor closest to you:

1–800–533–9655 Toll Free

612–623–6928

612–378–3590 Fax

All information, illustrations and specifications in this document are based on the latest product information available at the time of publication. The right is reserved to make changes at any time without notice.

MM 309032

Graco Headquarters: Minneapolis
International Offices: Belgium, Korea, China, Japan

GRACO INC. P.O. BOX 1441 MINNEAPOLIS, MN 55440–1441

www.graco.com

PRINTED IN U.S.A. 309032 12/1999, Revised 06/2005